Electrolux PROFESSIONAL

PLUS - Static Preparation 1000 mm Work Table with Upstand

ITEM #

MODEL #

NAME #

SIS #

AIA #

134011 (GTG1010E) Work Table with 100mm upstand, 1000mm

Short Form Specification

Item No.

Enhanced stability and solid construction thanks to the welded frame and legs. The 50mm high worktop in 304 AISI stainless steel, with Scotch Brite finishing 15/10 mm in thickness, has anti-drip edges and welded corners and 18mm thick undertop reinforced worktop, it's completely waterproof, double-sided laminated and 100% recyclable. Upstand h=100mm with 10mm radius corner covered on the back with AISI 304 stainless steel spot welded profile. Square section legs and height adjustable feet (+20/+30 mm) in 304 AISI stainless steel.

APPROVAL:

Main Features

- Enhanced stability and solid construction. Stability, loading and stress tests by external certified body.
- Product range suitable for international tenders requirements for intense usage installations.

Construction

- Welded frame and legs.
- Worktop with 50 mm high profile, in s/s Scotch Brite finishing, 15/10 in thickness with anti-drip edges and welded corners.
- Constructed entirely in 304 AISI stainless steel.
- Undertop is 18mm in thickness, reinforced, completely waterproof, double-sided laminated and 100% recyclable.
- Upstand back completely covered with Stainless Steel welded profile.
- Square section legs (40x40mm, 10/10 in thickness) and height-adjustable feet (-20/+30mm).
- Accessories:
  - drawers are easily accesible thanks to the fully extractable guides, completely in stainless steel. Rounded corners facilitate cleaning and improve hygiene, they can installed in any position under the top and can hold GN containers with a maximum height of 100mm. Ergonomic stainless steel handle and fluently sliding guides.
  - single drawer and chest of 4 drawers are available in 400mm (suitable for 1/1 GN containers) or 600mm sizes.
  - chest of drawers available only for models with lower shelf.
  - set of castors as alternative to the feet, can be fitted as optional.

Optional Accessories

- Drawer for 1/1GN container, 400mm — PNC 855201 ❑
- Drawer 600X650X150mm — PNC 855202 ❑
- Chest of 4 drawers for 1/1G, 400mm — PNC 855203 ❑
- Chest of 4 drawers, 600mm — PNC 855204 ❑
- Set of 4 wheels (2 with brake), diameter=100mm — PNC 855205 ❑

PLUS - Static Preparation
1000 mm Work Table with Upstand

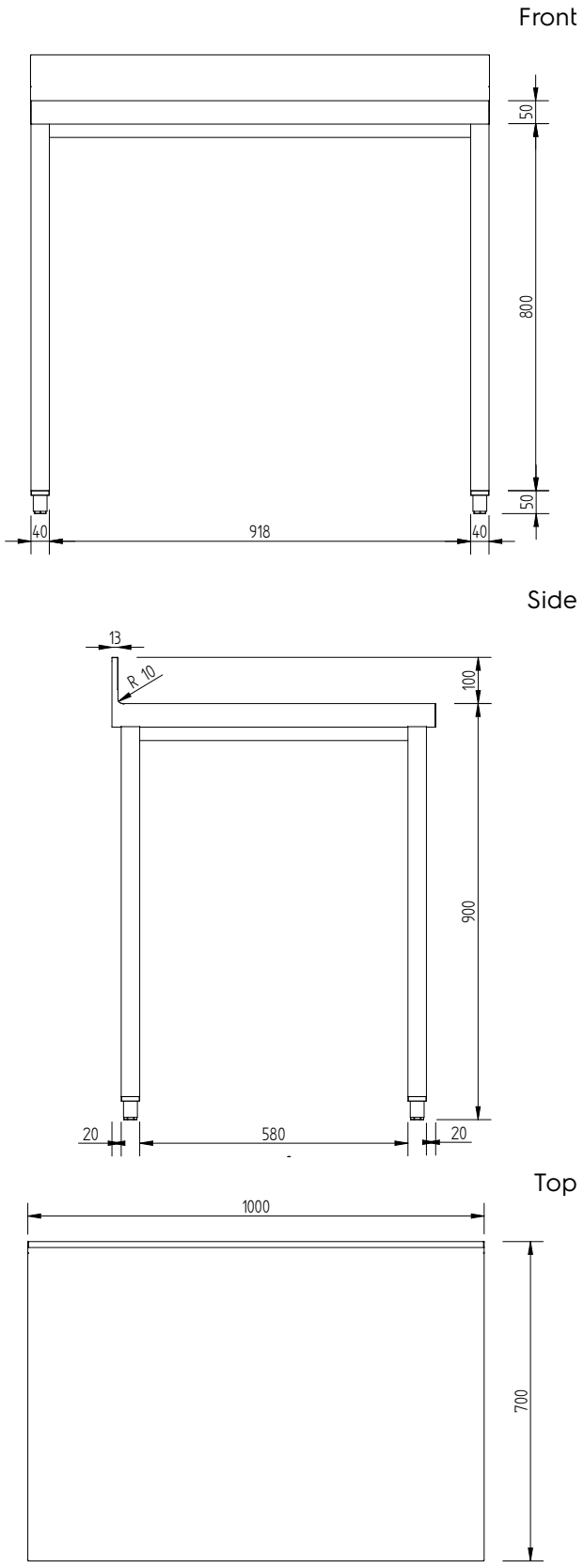

Key Information:

External dimensions, Width:	
134011 (GTG1010E)	1000 mm
External dimensions, Depth:	700 mm
External dimensions, Height:	1000 mm
Upstand Dimensions, Height:	100 mm
Upstand Dimensions, Depth:	13 mm
Upstand Dimensions, Radius:	R=10
Worktop thickness:	50 mm
Net weight:	33 kg

The company reserves the right to make modifications to the products without prior notice. All information correct at time of printing.

2024.10.05